KellyMed®

# KL-5021A Feeding Pump

## User's Manual

Beijing KellyMed Co., Ltd.

# CONTENTS

REVISION HISTORY ..... 1
1. INTRODUCTION ..... 2
1.1 Explanation of symbols ..... 2
1.2 Features ..... 2
2. DESCRIPTION OF PUMP ..... 3
2.1 Front view ..... 3
2.2 Rear view ..... 4
2.3 Components ..... 5
3. PRIOR TO USE ..... 6
3.1 Warnings ..... 6
3.2 Precautions ..... 7
3.3 Cleaning and disinfection ..... 7
3.4 Storage ..... 8
3.5 Maintenance and repair ..... 8
3.6 Packing List ..... 9
3.7 Disposal of waste product ..... 9
3.8 Fault handling ..... 9
4. OPERATION ..... 10
4.1 Install the pump to a pole stand ..... 10
4.2 Connect to AC power ..... 10
4.3 Prime a feeding set ..... 10
4.4 Install a feeding set ..... 11
4.5 Close the door ..... 12
4.6 Switch on and switch off the pump ..... 12
4.7 Main menu ..... 12
4.8 Set flow rate (ml/h) ..... 12
4.9 Set VTBI (ml) ..... 13
4.10 Clear infused volume (ml) ..... 13
4.11 Start/Stop infusion ..... 13
4.12 Purge ..... 13
4.13 Infusion completion ..... 14
5. SPECIAL FUNCTIONS ..... 15
5.1 System memory of VTBI & flow rate ..... 15
5.2 Silence the alarm and reminder alarm function ..... 15
5.3 Temporarily stop infusion ..... 15
5.4 Run the pump with built-in battery ..... 15
5.5 Withdraw and flush function ..... 15
5.6 System setting ..... 16

6. TROUBLE SHOOTING ..... 17
7. SPECIFICATIONS ..... 20
7.1 Infusion ..... 20
7.2 Function parameters ..... 20
7.3 Mechanical ..... 20
7.4 Alarm ranking ..... 20
7.5 Alarm condition ..... 21
7.6 Alarm sound parameters ..... 21
7.7 Delay of alarms ..... 22
7.8 Other parameters ..... 22
8. SYMBOLS ..... 24
9. CALIBRATION ..... 25
9.1 Feeding set calibration ..... 25
9.2 Occlusion sensitivity calibration ..... 26
10. EMC DECLARATION ..... 28
11. WARRANTY ..... 31
APPENDIX A Chart of flow rate vs time ..... 32
APPENDIX B Bolus, duration, pressure value ..... 33

# REVISION HISTORY

The following revision history table summarizes the changes contained in this document.

The right is reserved to change or discontinue this product without notice.

| Revision No. | Revision Date | Description of Changes |
|---|---|---|
| 1.0 | 07/07/2014 | Initial version. |
| 1.1 | 07/08/2014 | In accordance with the requirements of CE improvement. |
| 1.2 | 12/04/2014 | Update “calibration”. |

**NOTE** Please read this User’s Manual before operating the Feeding Pump.

# 1. INTRODUCTION

## 1.1 Explanation of symbols

• Warning is used to indicate the presence of a hazard, which can cause severe personal injury, death or substantial property damage if the warning is ignored.

• Caution is used to indicate the presence of a hazard, which will cause minor personal injury or property damage if the caution is ignored.

NOTE

• Note is used to notify the user of installation, operation or maintenance information, which is important but not hazard-related.

Thank you for choosing our **Feeding Pump**.

In order to use this pump correctly and safely, read this manual carefully before operating the Feeding Pump. If you have any questions as you are reading through this manual, call the local authorized dealer in your country. Retain this manual together with the unit for future reference.

INTENDED USE: The Feeding Pump is an enteral nutrition pump which is used to deliver nutrient solution to patients in hospital and home care field.

• CONTRAINDICATION: The Feeding Pump is not intended for the infusion of chemicals such as anti-cancer drugs, oxytocic.

• The patient could operate, start or stop the pump, can’t to maintenance and repair the pump.

## 1.2 Features

• Compact in design, light in weight and small in size.
• Low motor driving noise.
• Ultrasonic bubble sensor.
• Easy to set VTBI (volume to be infused).
• Accurate setting of flow rate for patients.
• Flow rate accuracy with the equipped peristaltic finger system.
• The infused volume can be cleared.
• Audio-visual alarms for added safety.
• The reminder alarm sounds repeatedly if no action is taken within 2 minutes after the alarm.
• The flow rate can be adjust in 1ml/h, 5ml/h,10ml/h increments.
• When door is open, the tube is automatically locked by tube clamp.
• The rechargeable built-in battery allows the pump to be transported with the patient without ceasing normal pump operation.

# 2. DESCRIPTION OF PUMP

## 2.1 Front view

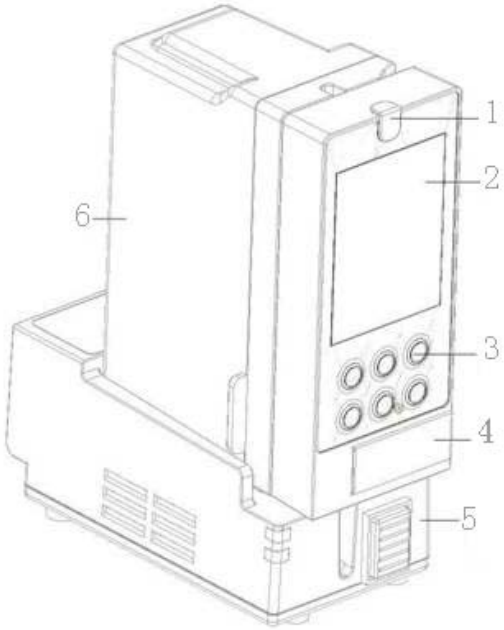


1) Flow LED: Alternately flash when running the pump.
2) Display screen: Display parameters and alarms.
3) Keyboard.

| Key | Description |
|---|---|
| On/Off | Keep pressing this key more than 1s to switch on the pump.<br>When pump is on but not running (standby mode), keep pressing this key for 3s to switch off the pump. When pump is running, keep pressing this for 5s to force the pump off. |
| Purge/Mute | In standby mode, double pressed and held into purge mode.<br>In run mode, double pressed and held this key to run in the purge speed.<br>If alarm happens, press this key to silence the alarm. |
| Start/Stop | In Standby mode, press this key to start the motor into run mode.<br>In run mode, press this key to stop the motor. |
| Function key | In difference interface, these three keys have difference function. The definition of the key is displayed on the bottom of the LCD. |

4) Door hook: Pull up the door hook to open the door.
5) Pump base: Contains the power and USB port.
6) Rear case.

## 2.2 Rear view

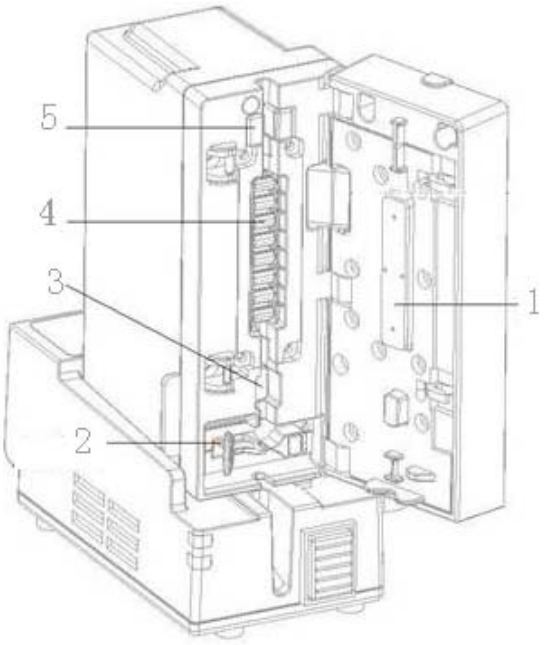


1) Tension plate: Press the feeding tube to generate pressure.
2) Tubing clamp: Automatically clamp the feeding tube when the door is open.
3) Occlusion sensor: Detect occlusion of the feeding tube.
4) Peristalsis fingers: Pump the feeding tube to deliver solution.
5) Bubble sensor: Detect air bubble in the feeding tube.

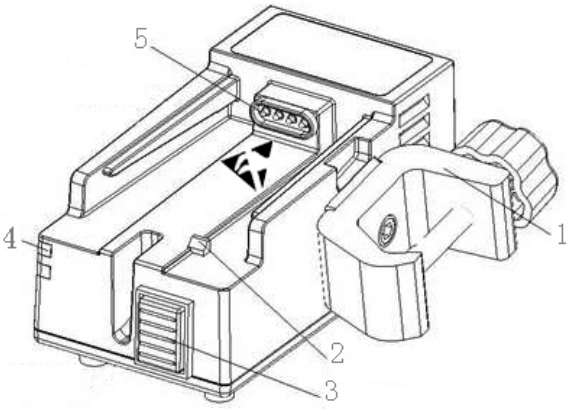


1) Pole clamp.
2) Pump base stopper.
3) Pump base switch.
4) LED: AC indicator.
5) Pump and pump base connector.

The ESD warning symbol shows that pins of connectors should not be touched.

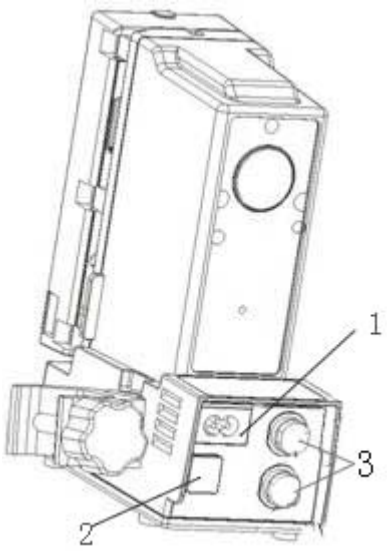


1) AC power inlet.
2) USB communication port: Connect to PC to export data and upgrade software.
3) Reserved interface.

## 2.3 Components

AC power cord

• No component can be maintained by user. The circuit diagrams, component part lists, descriptions or other information which will assist the user's appropriately qualified technical personnel to repair those parts of equipment which are designated repairable can be supplied by us.

# 3. PRIOR TO USE

## 3.1 Warnings

• If the pump is used in the vicinity of the surgical operation equipment which generates a high frequency current such as mobile (cellular) phone, radio, or defibrillator, the pump may malfunction because of the electrical interference. Please carefully check for any sources of electrical interference in the vicinity before use.

• When using the pump concurrently with the surgical operation equipment, please note the following:

- Do not use the pump together with any surgical operation equipment that generates high noise level.
- Be sure that the pump is kept in a sufficient distance from the surgical operation equipment.
- The pump and such device should not be powered from the same outlet.
- Check and confirm the normal operation of the pump periodically.

• In case of malfunction, turn off the power immediately, and remove feeding set from the pump and the patients. After this action, please contact your local authorized dealer at once.

• Avoid using the pump in presence of flammable gases and flammable anesthetic mixture with air, oxygen or nitrous oxide.

• The use of any mobile (cellular) phone near the pump is not allowed since the high frequency noise during the conversation could cause malfunction of the pump.

• The use of the pump in MRI rooms such as high-pressure rooms or places where high electromagnetic radiation is generated is not allowed.

• Be sure that the feeding set is appropriative. If an improper feeding set is used, the flow rate accuracy and alarm function cannot be guaranteed.

• The feeding tube is not provided with the pump.

• Be sure that the feeding tube properly fits in the tube slots of bubble sensor and occlusion sensor. If not, those alarms will not function normally.

• Be sure that the feeding tube runs straight over the peristaltic finger section. If not, the flow rate accuracy cannot be guaranteed.

• During feeding, regularly check the drop rate to make sure that the solution is being infused at the selected rate.

• Do not connect the feeding set administered from a Feeding Pump to another feeding set administered only by the roller clamp because this may cause inaccuracy of flow rate and alarm functions.

• When the same site of the feeding tube has been set at peristaltic finger section for a long time (over 12 hours), use it after moving the feeding tube connected to this pump at a distance of more than 10 cm. Deformation of feeding tube arised from long time (over 12 hours) use will affect the accuracy.

• The pump does not detect damage of the feeding set such as a leak in the line or a rupture in the filter due to pressure exertion. Therefore, please regularly check for any damage of the feeding set during infusion.

• When the flow is obstructed due to kinking of the feeding tube or clogging of the needle or filter, it can cause the pressure increment in the feeding set and cause the feeding tube to be inflated with the solution. Complete removal of the obstruction will allow the solution to be delivered to the patient. If the flow is obstructed, take appropriate actions after completely closing the roller clamp of feeding set.

• The pump is connected to an AC power outlet to be operated. If there is no available AC power outlet, the pump will be operated with only its built-in battery.

•The pump can't be placed in where difficult to off the device.

• The spill of the solution on the AC power inlet may cause a short circuit.

• In case of malfunction, do not try to take the unit apart or attempt to repair by yourself. Please contact your local authorized dealer immediately. If the user does not comply with these warnings, System cannot be held liable and the warranty does not apply.

### 3.2 Precautions

• Do not try to use the pump for other purposes such as blood transfusion.

• Fix the pump securely to a pole stand and check its stability.

• The pump must be used in accordance with this instruction manual by trained medical personnel.

• Be sure to use components including power cord, provided or recommended in this manual.

• When alarm sounds, please take corrective actions.(Refer to troubleshooting)

### 3.3 Cleaning and disinfection

Before cleaning the pump, make sure to power off the pump and disconnect the AC power cord. Do not immerse the pump in any liquid nor allow any liquid to leak into the pump. If spillage into the pump mechanism occurs, clean immediately by wiping with a soft cloth.

• Do not use drier to dry the unit.

• Used pumps should be disinfected before use on another patient.

• Do not clean, disinfect or sterilize any part of the pump by autoclaving or with ethylene oxide gas. Doing so may damage the pump and void the warranty.

• Do not use the following chemicals on the pump, as they will damage the front panel.

• Acetone, ammonia, benzene, hydroxytoluene, methylene chloride, n-alkyl dimethyl ethylbenzyl ammonium chloride, and ozone.

• The pump needs cleaning and disinfectio twice every year.

**NOTE**

• If cleansers or disinfectant solutions used, Follow manufacturers' dilution instructions for concentrated cleansers or disinfectant solutions.

• Cleaning procedures:

Open pump door, use cloth sparingly dampened with any cleanser list in List 3.1. Wipe the split of bubble sensor. Wipe peristalsis fingers. Wipe the occlusion sensor, tension plate and other surface in it. Close pump door, wipe enclosure surface. Ensure that clean cloths do not become contaminated. Allow surfaces to remain wet for 30 seconds.

• Disinfection procedure:

Open pump door, use cloth sparingly dampened with any infectant solution list in List 3.2. Wipe the split of bubble sensor. Wipe peristalsis fingers. Wipe the occlusion sensor, tension plate and other surface in it. Close pump door, wipe enclosure surface.

List 3.1 recommend cleanser

| |
|---|
| A solution of 10% bleach and water |
| Soapy water |
| Isopropyl alcohol up to 75% |
| Distilled water |

List 3.2 recommend disinfectant solution and manufacture

| **Super Edisonite** | **Edison Chemical Co.** |
|---|---|
| Cleaner | Manufacturer |
| LpH, Septisol | Vestal Labs |
| Cidex 7 | Surgikos |
| TOR or Hi-Tor Plus | Huntington Labs |
| Super Edisonite | Edison Chemical Co. |
| Bafix | Hysan Corp. |

### 3.4 Storage

• Avoid the following environment for storage and transport of the Feeding Pump
- Where the unit is exposed to dirt or heavy dust.
- Where the unit is exposed to salty atmosphere.
- Where the unit is exposed to severe vibration or corrosive gas.
- Where the unit is exposed to rough handling.
- Where the unit is exposed to direct sunlight or UV light.
- Where the unit is exposed to water.
- Where the unit is exposed to extreme temperature and humidity.

### 3.5 Maintenance and repair

• The pump need maintenance twice every year.

•If any irregularity and failure are detected, stop operation of the pump immediately and contact your local authorized dealer to repair or replace by supplying the details of the situation. Never try to disassemble or repair by yourself because it could cause further serious failure.

• Make sure that there is any damage with the pump and components. In case that the unit and components were shocked; do not use them even if visible damages are not observed. Please contact your local authorized dealer.

• Contact your local authorized dealer for periodical inspection of the pump for safety and longer product life.

• The pump can keep working for at least 6 hours at 100ml/h when powered by fully charged built-in battery. If the battery is low, the pump will stop running in 30 minutes if there is no way to connect the pump to an AC power outlet. After that pump will keep alarm until battery is exhausted.

• Operate the pump with the built-in battery once a month to check its performance because the built-in battery is subject to aging. If the operation time is getting short after it is normally recharged, contact your local authorized

dealer to replace with a new battery. Please be sure that your local authorized dealer check it annually.

• Please recharge the built-in battery fully for more than 4 hours by connecting the pump to an AC power outlet before the pump is used for the first time or after a long interval.

### 3.6 Packing List

| No. | Description | Qty. |
|---|---|---|
| 1 | Feeding Pump | 1 |
| 2 | Power Cord | 1 |
| 3 | User's Manual | 1 |
| 4 | Certificate | 1 |

### 3.7 Disposal of waste product

• Waste product should be disinfected and sterilized before disposal. After that, please handle it refer to local laws .

• When battery reaches the end of life, do not throw it into fire or water; do not disassemble, recharge, or short it. Please handle it refer to local laws.

### 3.8 Fault handling

| Fault | Processing method | Operator | Acceptance condition |
|---|---|---|---|
| Cleaning and disinfection | See chapter 3 Cleaning and disinfection | User | |
| Calibration | See chapter 9 | User | ACCURACY and occlusion functions are normally |
| Air alarm | See chapter 6 | User or local authorized dealer | It can detect the bubble above 90uL |
| Occlusion alarm | See chapter 6 | User or local authorized dealer | Occlusion alarm function is normally |
| Speed alarm | See chapter 6 | local authorized dealer | Motor runs normally（No speed alarm） |

# 4. OPERATION

• When operating the pump, operator must face to the front panel of the pump, with a distance of 50cm.

## 4.1 Install the pump to a pole stand

• Referring to the following figures, connect the pump to the pump base.

• Install the pump on a pole stand with the pole clamp

• Fasten the bolt to fix the pump.

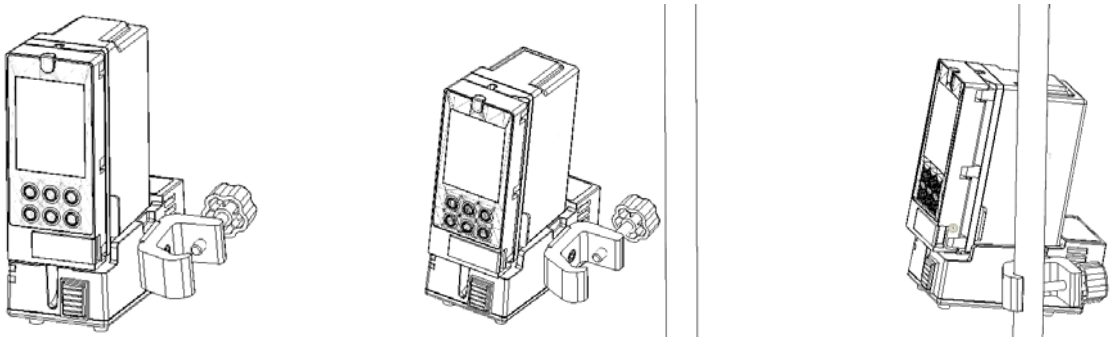

• Don’t install the pump as the following figure .The pump could fall off from the base.

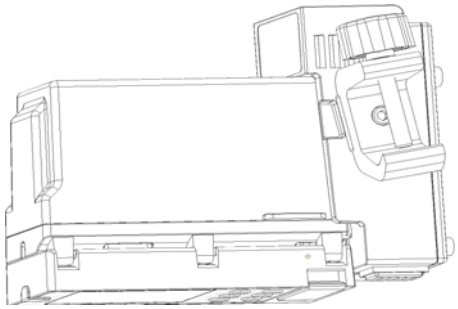

## 4.2 Connect to AC power

• Connect the AC power cord to the AC power inlet.

• The built-in battery will be recharged automatically once connect to AC power.

**NOTE** • Alternatively, the pump may be operated by the built-in battery.

## 4.3 Prime a feeding set

1. Connect feeding set to feeding bag.
2. Open roller clamp, prime feeding set, make a few drops of liquid out of tubing, close roller clamp.

### 4.4 Install a feeding set

1. Open pump door.
2. Straighten feeding set, install it through air bubble sensor, occlusion sensor, tubing clamp.
3. Close pump door.
4. Open roller clamp, ready for infusion.

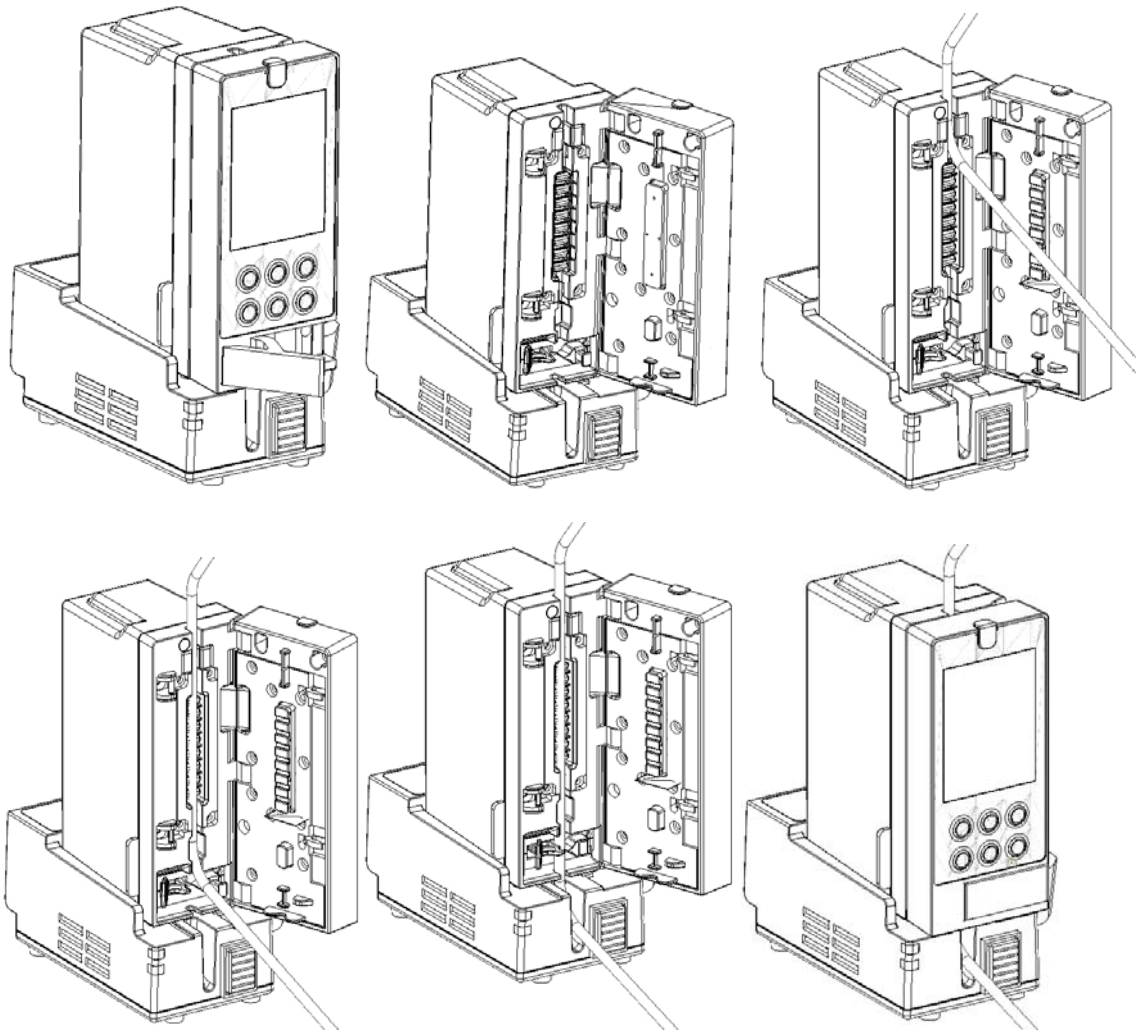

• If the feeding set does not keep straight over the peristaltic finger section, the desired flow rate accuracy can affect the accuracy.
• When the same site of the tube has been set at peristaltic finger section for a long time (over 12 hours), to use it after moving the feeding tube connected to this pump at a distance of more than 10 cm. Deformation of feeding tube arising after long time (over 12 hours) using which can affect the accuracy.
• The tube should be replaced with a new one every 24 hours.

**NOTE**

• If there is a need to replace feeding set with a new one while using the pump, follow the below procedures.

1）Stop the pump.

2）Close the roller clamp, open the door, and remove the feeding set.

3）Replace the feeding set and prime the feeding set.

4）Close the door, open the roller clamp.

5）Restart infusion.

### 4.5 Close the door

• Close the door and lock it with lock lever.

• Make sure the feeding tube is installed properly and not clamped by the door.

### 4.6 Switch on and switch off the pump

• Keep pressing [On/Off] key more than 1s, LCD displays self-checking procedure, including: LCD, flow LED, audio, time, door, bubble etc. Then LCD displays main menu.

•When pump is on but not running (standby mode), keep pressing [On/Off] key for 3s to switch off the pump. When pump is running, keep pressing [On/Off] key for 5s to force the pump off.

### 4.7 Main menu

The main menu displays as below (see figure):

1) AC/DC icon: Connect to AC, it displays this icon. Connect to DC, it displays .
2) Battery icon: Shows the volume of battery or the battery under charge.
3) Alarm.
4) Occlusion level: Low, Medium, High.
5) Running indicator.
6) VTBI: volume to be infused.
7) Flow rate.
8) Infused: infused volume.
9) Keyboard guider.

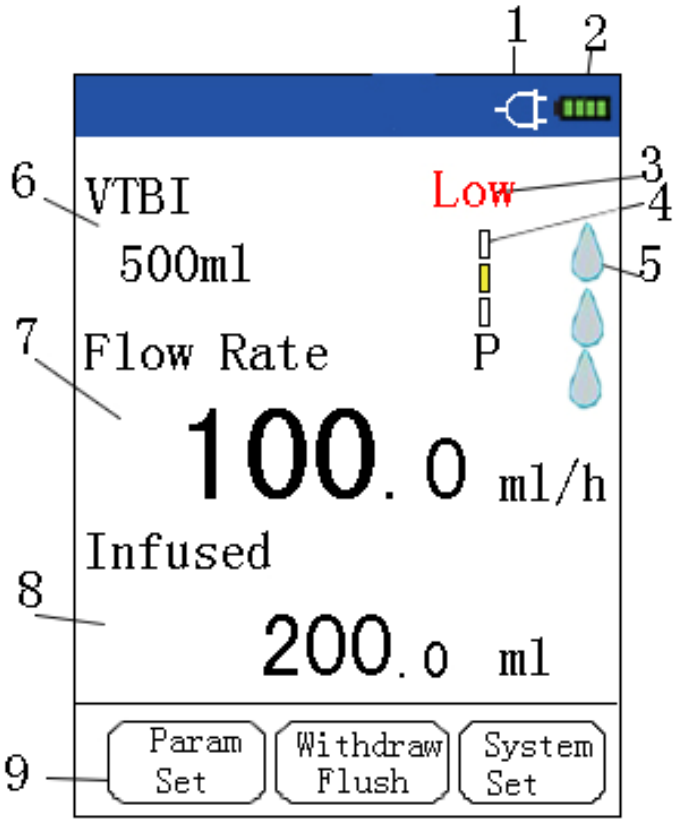


### 4.8 Set flow rate (ml/h)

1. When pump in standby mode, Press “Param set” to set flow rate. The flow rate value is flashing, at the same time, the key area displays “Incr”, “OK”, “Decr”.
2. Press “Incr” or “Decr” key. The flow rate value will be increased or decreased.
3. Press “OK” to confirm the value of flow rate.

**NOTE**

• Keep pressing “Incr” or “Decr” key for several seconds, the value will be increased or decreased faster.

### 4.9 Set VTBI (ml)

1. After setting flow rate, the VTBI is flashing.
2. Press “Incr” or “Decr” key to set VTBI.
3. Press “OK” to confirm the value of VTBI.

**NOTE**

• Keep pressing “Incr” or “Decr” key for several seconds, the value will be increased or decreased faster.

### 4.10 Clear infused volume (ml)

1. After setting VTBI, the “Infused” area is flashing with “0.0” or last infused volume.
2. Press “Clear”, the “Infused” area will become “0.0”. Press “OK” to exit.

• Before restarting the infusion, make sure that the parameters of flow rate, VTBI are set correctly.

**NOTE**

• In case of restarting infusion after clearing the infused volume, the pump will start to deliver the solution from “0.0” to the value of VTBI.

• The VTBI range is as follows:

1~9999 ml (in 1, 5, 10 ml increments)

### 4.11 Start/Stop infusion

• In standby mode, pump displays last successful setting parameters: flow rate and VTBI. Flow rate and VTBI can be set in standby mode. Volume can be cleared. In run mode, the parameters can’t be set.

• When pump in standby mode, press [Start/Stop] key to start infusion, pump enters run mode. In run mode, press [Start/Stop] key, the motor stop. The pump enters standby mode.

• Flow LED on top of the pump door flickers (green). This means the pump is running.

**NOTE**

• Before operating the pump, make sure to check flow rate and VTBI and the feeding set again.

• Check the flow rate and VTBI, make sure these parameters are correct. If the flow rate is bigger than VTBI, pump will point out "Param Confirm" .Press [Start/Stop]key to run or press “Param set” to set parameters.

• If any irregularity is observed, immediately stop the pump and contact your local authorized dealer.

### 4.12 Purge

• When [Purge/Mute] key is double pressed and held, the pump delivers the solution at preset purge rate.

**NOTE**

• In standby mode, Purge function can be used for removing air in feeding set.

• In run mode, The purge volume is added to total infused volume.

Alarms will not work while purging. Make sure the pump is in normal condition after purging.

**4.13 Infusion completion**

• When the infused volume reaches the VTBI, pump alarms and stops, the flow LED flickers (yellow).

• Pressing [Start/Stop] key to return standby mode, mute the alarm.

• Before opening the door to release the tube clamp and remove the feeding set, make sure to close the roller clamp completely.

• Free flow will occur if the feeding set is removed or the tube clamp is released without completely closing the roller clamp.

# 5. SPECIAL FUNCTIONS

## 5.1 System memory of VTBI & flow rate

• The pump initially displays the VTBI and flow rate of last operation. These parameters can be saved in the internal memory.
• Set VTBI and flow rate by pressing “Param set”.

## 5.2 Silence the alarm and reminder alarm function

• If alarm happens, press [Purge/Mute] key to silence the alarm.
• If other alarms are occurs, or if no corrective action is taken within 2 minutes, the reminder alarm occurs.

## 5.3 Temporarily stop infusion

• Press [Start/Stop] key, pump stops and enters standby mode.
• Before restarting the infusion, make sure to check the set flow rate, VTBI and press [Start/Stop] key.

## 5.4 Run the pump with built-in battery

• The pump is automatically switched to the built-in battery, flow LED flickers (yellow) and displays alarm low in LCD when the AC power is off.
• The built-in battery is recharged by connecting the pump to an AC power outlet when powered on.
• The battery is recharged regardless of the pump status.
• The pump can be operated with the built-in battery for about 6 hours at 100ml/h.

• During infusion, if low battery alarm exist with the alarm sound, the built-in battery should be recharged by connecting the pump to an AC power outlet without pressing any key, otherwise the pump may stop running as it means the voltage of the built-in battery will be depleted in 30 minutes
• When the voltage of the built-in battery is depleted, the pump will stop running with the alarm without a previous notice.
• The battery is subject to aging. Please have your local authorized dealer check it annually.
• To keep the battery in a good condition, recharge it at least once a month even if it is not used for a long time.
• Please confirm if the built-in battery works properly by turning on the Feeding Pump without connecting to an AC power outlet once a month.
• when using the pump for the first time, or it is used after a long interval, to recharge the built-in battery fully by connecting the pump to an AC power outlet for more than 4 hours.

## 5.5 Withdraw and flush function

• When pump is in the main menu, Press “Withdraw Flush”, then pump displays “Withdraw”, “Flush” and “Back”.

- Press “Withdraw”, the reversal of motor will start and the reversal value will be displayed in front of volume. The pump displays “Stop”. Press “Stop” or the reversal value reaches the volume of preset “Withdraw Value”, pump stops.
- Press “Flush” to start the pump. The pump displays flush value. Pump displays “Stop”. Press “Stop” or the Flush value reaches the volume of preset “Flush Value”, pump stops.
- Press “Back” to main menu.

### 5.6 System setting

- System setting (see figure) includes: Occlusion Level, Bubble, Step, Backlight Level, Backlight Delay, Alarm Volume, Key Lock Delay, Language, Heat, Time & Date, System Check, Version, Data Export, Data Update, Wireless, Purge Rate, Withdraw & Flush, Factory Default.
- Data communication includes: Data Export, Date Update.These functions are not open to customer temporarily.
- The scroll bar on the right side of the interface shows the item current place. When the scroll down to the bottom, it shows that this item is the last one.
- In this interface, keep pressing“OK” more than 1 second, returns to main menu from the system setting. And press “UP” or “DOWN” to the last item “Exit”, then press “OK” it returns to main menu too.
- When pump is in standby mode,Press “System Set” to enter system setting.
- Press “UP” or “DOWN” to make item highlighted. Press “OK” to set the highlighted item.

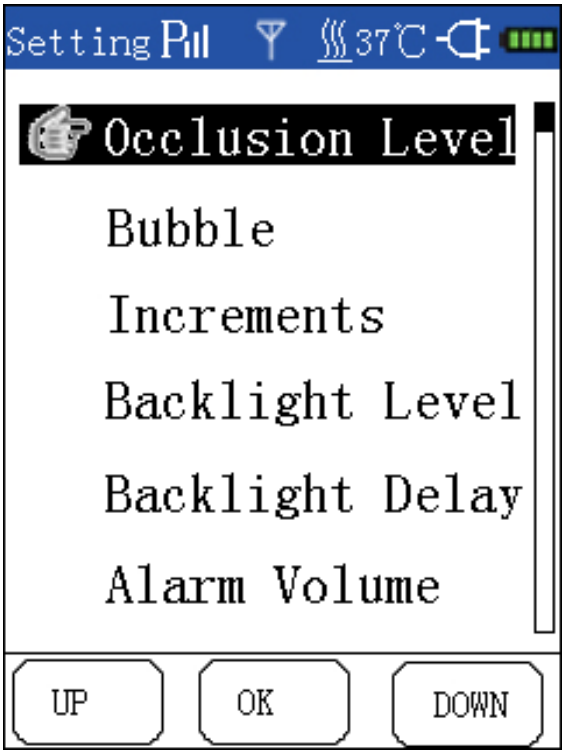

# 6. TROUBLE SHOOTING

Take the following actions if any trouble occurs. When the troubles could not be solved with the following actions, Please contact your local authorized dealer immediately.

**NOTE** • Whenever the high alarm sounds, the pump will stop infusion and flow LED is flashing in red. That is, alarm sounds only in error situation during infusion.

| Symptom | Cause | Action |
|---|---|---|
| Pump cannot be switched on. | • AC power cord is not inserted properly | Check the AC power cord connection. |
| | • Built-in battery has deteriorated. | Stop the operation of the pump and replace with a new battery through your local authorized dealer. |
| | • The voltage of the built-in battery is low. | Recharge the battery fully for more than 4 hours by connecting the pump to an AC power outlet and turn it on. |
| AIR alarm exist and alarm sounds continuously | • Air bubble in feeding set.<br>• Feeding set is not properly placed.<br>• Bubble sensor is stained. | 1. Turn the alarm off by pressing [Start/Stop]key. Pump enters standby mode.<br>2. Close the roller clamp of the feeding set<br>3. Take the feeding set from the pump and tap the tube to make the air bubble gather into the drop chamber. (In case that bubble sensor is stained, clean it with a gauze cloth or similar, moistened with cold or tepid water)<br>4. Place the feeding set properly in place.<br>5. Close and lock the door securely.<br>6. Open the roller clamp of the feeding set.<br>7. Make sure that the parameters of flow rate and VTBI are set correctly.<br>8. Restart infusion by pressing [Start/Stop]key. |
| | • Feeding set is not compatible with this pump. | Check the compatibility of feeding set with your local dealer. |
| OCC alarm exist and alarm sounds continuously | • The roller clamp is closed. | 1. Turn the alarm off by pressing [Start/Stop] key. Pump enters standby mode.<br>2. Open the roller clamp on feeding set.<br>3. Make sure that the parameters of flow rate and VTBI are set correctly.<br>4. Restart infusion by pressing [Start/Stop] key. |

| Symptom | Cause | Action |
|---|---|---|
| | • Feeding set is not compatible with this pump. | Check the compatibility of feeding set with your local dealer. |
| | • Feeding Tubing is kinked or twisted<br>• Feeding set is not properly placed<br>• Feeding Tubing is stretched or shrunk | 1. Turn the alarm off by pressing [Start/Stop] key. Pump enters standby mode.<br>2. Close the roller clamp on feeding set.<br>3. Open the door and take the feeding set from the pump, check the feeding set and take a corrective action like untwisting or replacing with a new one to solve the problem of occlusion.<br>4. Set the feeding set back properly in place. |
| | • Occlusion sensor is abnormal | Follow the steps for shifting feeding set. Try to dismount feeding set and mount it again.<br>If this symptom happens again and again, please contact your local authorized dealer to replace the battery. |
| Exhaust alarm exist and alarm sounds continuously | • Battery exhaust, when pump powered by built-in battery | 1. Turn off the pump.<br>2. Plug in AC power cord, if it isn't plugged in.<br>3. Turn on the pump.<br>4. Battery icon dynamical displays. If battery is charged normally and go to next step.<br>5. Make sure that the parameters of flow rate and VTBI are set correctly.<br>6. Restart infusion by pressing [Start/Stop] key.<br>If this symptom happens again and again, please contact your local authorized dealer to replace the battery. |
| Rate alarm exist and alarm sounds continuously | • Peristaltic finger system is out of work. | 1. Turn the alarm off by pressing [Start/Stop] key. Pump enters standby mode.<br>2. Restart infusion by pressing [Start/Stop] key.<br>3. Listen closely to peristaltic finger system, if there isn't any noise; contact your local authorized dealer. |

| Symptom | Cause | Action |
|---|---|---|
| The low accuracy after long time use | • The same site of the tube has been set for a long time (over 12 hours) at peristaltic finger section.<br>• feeding tube is not properly placed | 1. Turn the alarm off by pressing [Start/Stop] key.<br>2. Close the roller clamp on feeding set.<br>3. Open the door. Either move the feeding tube where connected to this pump at a distance of more than 10cm to reset or replace feeding set with a new one.<br>4. Set the feeding set back properly in place.<br>5. Close and lock the door securely.<br>6. Open the roller clamp of feeding set.<br>7. Make sure that the parameters of flow rate and VTBI are set correctly.<br>8. Restart infusion by pressing [Start/Stop] key. |
| | • Feeding set is not compatible with this pump. | Check the compatibility of feeding set with your local dealer. |

• Before restarting infusion, Make sure that the parameters of flow rate and VTBI are set correctly.

• After restarting infusion, check flow rate to confirm the delivery of the solution at the selected rate.

• Bubble alarm and Occlusion alarm can be shut down.

# 7. SPECIFICATIONS

## 7.1 Infusion

| | |
|---|---|
| **FLOW RATE** | 1-2000 ml/h |
| **ACCURACY** | ±5% |
| **VTBI** | 1-9999 ml (in 1, 5, 10 ml increments) |

## 7.2 Function parameters

| | |
|---|---|
| **PURGE RATE** | 600-2000ml/h |
| **BUBBLE SENSOR** | On/Off |
| **OCCLUSION SENSITIVITY** | High, middle, low<br>High:70-120Kpa (525-900 mmHg)<br>Middle:40-90Kpa (300-675 mmHg)<br>Low:20-60Kpa (150-450 mmHg) |

## 7.3 Mechanical

| | |
|---|---|
| **PUMPING MECHANISM** | Curvilinear peristaltic |
| **DIMENSIONS (W×D×H)** | 150×120×60 (mm) without base |
| **WEIGHT** | 1.7 kg |

## 7.4 Alarm ranking

| mode | The ranking of alarm |
|---|---|
| run | Door, Infusion completion, Exhaust, Occlusion, Air, Flow rate abnormal(Those alarms could make the motor stop)<br>Low battery, AC Failure ( Those alarms can’t make the motor stop) |
| Standby | Door, Occlusion, Exhaust, Air, Low battery, No operation, AC Failure |

### 7.5 Alarm condition

| Alarms | Priority | Lamp color and frequency | Alarm condition |
|---|---|---|---|
| AIR IN LINE | high | Red 2Hz | when an air bubble is in the feeding tube |
| OCCLUSION | high | Red 2Hz | when the feeding tube is obstructed |
| DOOR OPEN | high | Red 2Hz | when the door is open |
| EXHAUST | high | Red 2Hz | when battery capacitor is exhaust |
| FLOW RATE ABNORMAL | high | Red 2Hz | When flow rate is too fast or slow or can't check coded disk or reversal. |
| INFUSION COMPLETION | Middle | Yellow 0.5Hz | When VTBI is delivered. |
| LOW BATTERY | Middle | Yellow 0.5Hz | when battery capacitor is low |
| AC FAILURE | Middle | Yellow 0.5Hz | AC source accidentally off |
| NO OPERATION | Middle | Yellow 0.5Hz | No operation and pump in standby mode in 2 minutes |
| ABNORMAL COMMUNICATIO N | Middle | Yellow 0.5Hz | The pump is abnormal communication with base . |
| All alarms are technical alarm. | | | |

### 7.6 Alarm sound parameters

| Characteristic | Value | | |
|---|---|---|---|
| Pulse Frequency（f） | High | Mid | Low |
| | 519.488Hz | 390.7328Hz | — |
| Number of harmonic components in the range 300Hz to 4000Hz | High | Mid | Low |
| | 13 | 9 | — |
| Number of Pulse | High | Mid | Low |
| | 10 | 3 | — |
| Effective Pulse Duration(t2)<br>High Priority<br>Medium and Low priority | <br>131ms~136.2ms<br>131ms~134ms | | |
| Rise time(t1) | High | Mid | Low |
| | 12.5ms~15ms | 15ms | |
| Fall time(t3) | High | Mid | Low |
| | 2.56ms | 5.8ms | |

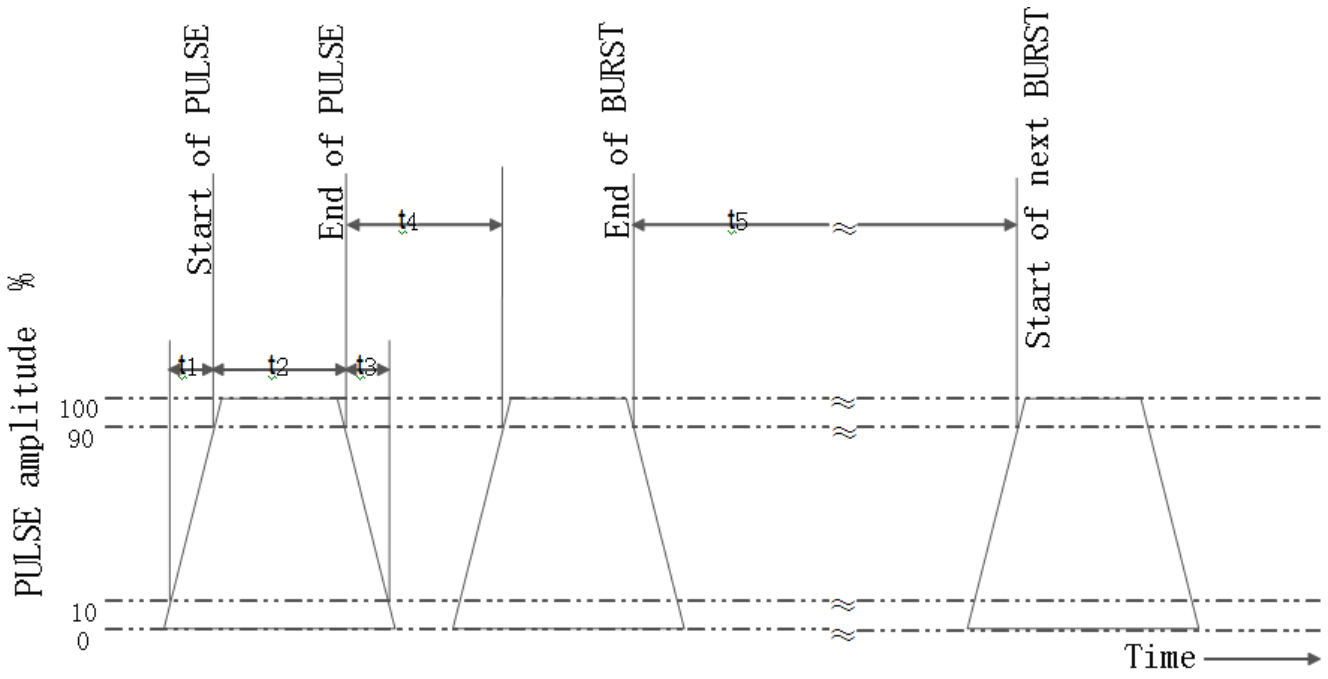


### 7.7 Delay of alarms

| Alarms | Alarm condition delay | Alarm signal generation delay |
|---|---|---|
| AIR IN LINE | 125ms | 75ms |
| OCCLUSION | 20S | 200ms |
| LOW BATT | 1S | 200ms |
| DOOR OPEN | 1S | 200ms |
| FLOW RATE ABNORMAL | 2160S @ 1ml/h<br>90S @ 25ml/h | 200ms |
| FINISH | 10ms | 200ms |
| AC FAILURE | 1S | 200ms |
| REPEAT ALARM | 120S | 200ms |

### 7.8 Other parameters

| | | |
|---|---|---|
| **POWER SUPPLY** | 110/230 VAC, 50/60 Hz | |
| **BATTERY** | Li-ion 3*3.6VDC 2200mAh | |
| **POWER CONSUMPTION** | 45VA | |
| **ALARM SOUND PRESSURE** | High level | Low level |
| | More than 45db@1m | More than 60db@1m |
| **CLASSIFICATIONS** | Class Ⅱ / built-in power supply / Type CF | |
| **BATTERY / OPERATION / CHARGING** | Li-Ion / 6 hours (at 100 ml/h) / more than 4 hours | |
| **BATTERY LIFE** | 2 years | |
| **OPERATION CONDITIONS** | 10-30℃, 30-75% RH (no condensation) | |
| **STORAGE CONDITIONS** | -20~45℃, ≤93% RH (no condensation) | |

| | |
|---|---|
| **WARRANTY PERIOD** | 1 year |
| **Altitude** | 2000 meters |

※*Specifications and design are subject to change for improvement without prior notice*

# 8. SYMBOLS

| Symbol | Description |
|---|---|
| | Warning |
| | Caution, consult accompanying documents |
| | Manufacturer |
| | Consult instructions for use |
| LOT | Batch code |
| SN | Serial number of the device |
| **IPX3**<br>**IPX5** | Waterproof level |
| ~ | AC |
| ⎓ | DC |
| | Do not throw it into wastebin |
| | Type CF applied part<br>(protection against electrical shock) |
| 3 | Stack products not exceed 3 packages |
| | Keep dry |
| 45℃<br>-20℃ | Storage conditions: -20~45℃ |
| EC REP | Authorized representative in the European Union |
| | Electrostatic sensitive devices.<br>The ESD warning symbol shows that pins of connectors should not be touched. |

# 9. CALIBRATION

In calibration mode include flow rate calibration, occlusion sensitivity calibration, current adjustment, and acceleration start point adjustment.

- Before using the Feeding Pump, make sure to calibrate flow rate and occlusion.

All Feeding Pumps have calibrated current adjustment and acceleration start point adjustment before they go out. So this function is used with caution.

If any irregularity is observed, immediately contact your local authorized dealer.

## 9.1 Feeding set calibration

- Use Feeding Pump for the first time or change a new brand of feeding set, calibration is needed. If infusion accuracy get worse or work Condition changed for example temperature, humidity changed. Calibrate the feeding set can get a better infusion accuracy.

Please follow the steps below to calibrate a feeding set.

Materials required but not provided: 10 ml cylinder / syringe.

The keys in the top row from left to right as [F1], [F2] and [F3].

1. Keep pressing [F1] key and simultaneously press [On/Off] key to enter calibration mode.
2. Select “Flow Rate”. Pump displays (see figure).

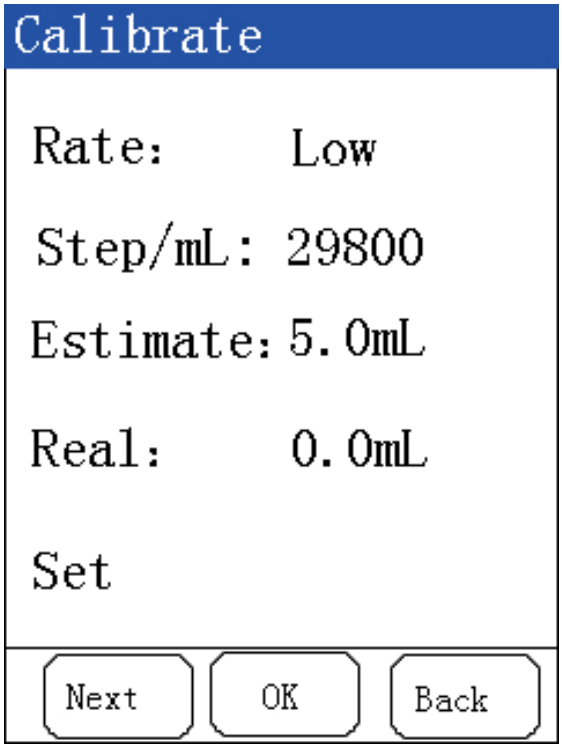


3. Press [F1] to switch the item of rate . Select ‘Rate’ item at “Low”, “Middle” or “High” to calibrate. Please select “Low” firstly.
4. Put the hypodermic needle in the cylinder / syringe. Open roller clamp.
5. Press [Start/Stop] key to start calibration.
6. The pump stops when “Real Value” area displays “5.0”. Read the real value of the infused liquid in the cylinder / syringe. Enter the real value in the “Real Value” area by pressing [F1] or [F3] key. Press [F2] key twice to save the calibration data of the low flow rate. Remove the infused liquid from the cylinder / syringe.
7. It is strongly recommended to repeat “STEP 5-6” twice to get a better accuracy, at least get a real value of

"5.0".

8. Press [F1], select 'Rate' item at "Mid", the pump will calibrate the feeding set at a medium flow rate. Repeat "STEP 5-7".
9. Press [F1], select 'Rate' item at "High", the pump will calibrate the feeding set at a high flow rate. Repeat "STEP 5-7".
10. Restart the pump and ready for infusion.

Please repeat "STEP 1-10" to calibrate other feeding sets.

**NOTE**

| Level | Flow Rate |
|---|---|
| Low | 200ml/h |
| Middle | 800ml/h |
| High | 1500ml/h |

## 9.2 Occlusion sensitivity calibration

The default flow rate is 200ml/h.

Prepare a manometer (see figure) with precision of 0.01MPa, test range up to 0.5Mpa, connect the feeding tube to the manometer.

1. Keep pressing [F1] key and simultaneously press [On/Off] key to enter calibration mode.
2. Select "Occlusion". Pump displays (see figure).
3. Press [Start/Stop] key to start calibration. Press [Start/Stop] key when the real value reaches 0.04Mpa. Press [Start/Stop] key again when the value reaches 0.12Mpa. Pump stops, occlusion calibration is finished.
4. Press [F2] key to save the data of occlusion calibration.

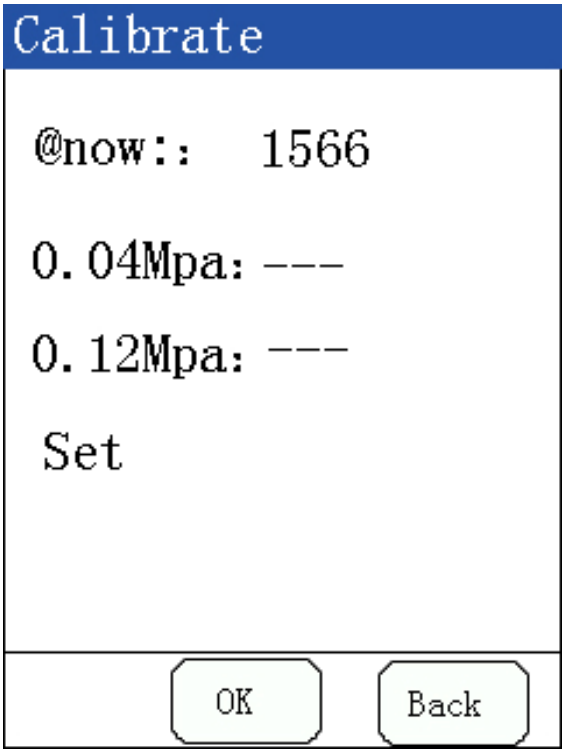

**NOTE**

• During occlusion calibration, current value should be continuously increased. Otherwise pressure sensor failure.

If the occlusion sensitivity can not be calibrated, occlusion alarm is abnormal.

**NOTE**

• The flashing displayed item can be changed.

# 10.EMC DECLARATION

The Feeding Pump needs special precautions regarding EMC and needs to be installed and put into service according to the EMC information provided in the accompanying documents.

Portable and mobile RF communications equipment can affect the Feeding Pump.

All cables and maximum length of cables, Transducers and other accessories with which the manufacturer of the Feeding Pump claims compliance with the requirements, Accessories that do not affect compliance with the requirements of these sub clauses need not be listed. Accessories, transducers and cables may be specified either generically or specifically.

**NOTE**

- Transducers and cables sold by the manufacturer of the Feeding Pump as replacement parts for built-in components need not be listed.

The use of accessories, transducers and cables other than those specified, with the exception of transducers and cables sold by the manufacturer of the Feeding Pump as replacement parts for built-in components, may result in increased emissions or decreased immunity of the Feeding Pump.

| **Guidance and manufacturer's declaration – electromagnetic emissions** | | |
|---|---|---|
| The Feeding Pump is intended for use in the electromagnetic environment specified below. The customer or the user of the Feeding Pump should assure that it is used in such an environment. | | |
| **Emissions test** | **Compliance** | **Electromagnetic environment – guidance** |
| RF emissions<br>CISPR 11 | Group 1 | The Feeding Pump uses RF energy only for its built-in function. Therefore, its RF emissions are very low and are not likely to cause any interference in nearby electronic equipment. |
| RF emissions<br>CISPR 11 | Class A | The Feeding Pump is suitable for use in all establishments other than domestic and those directly connected to the public low-voltage power supply network that supplies buildings used for domestic purposes |
| Harmonic emissions<br>IEC 61000-3-2 | A | |
| Voltage fluctuations/<br>flicker emissions<br>IEC 61000-3-3 | Complies | |

| **Guidance and manufacturer's declaration – electromagnetic immunity** | | | |
|---|---|---|---|
| The Feeding Pump is intended for use in the electromagnetic environment specified below. The customer or the user of the Feeding Pump should assure that it is used in such an environment. | | | |
| **IMMUNITY test** | **IEC 60601 test level** | **Compliance level** | **Electromagnetic environment – guidance** |
| Electrostatic discharge (ESD)<br>IEC 61000-4-2 | ± 6 kV contact<br>± 8 kV air | ± 6 kV<br>contact<br>± 8 kV air | Floors should be wood, concrete or ceramic tile. If floors are covered with synthetic material, the relative humidity should be at least 30 %. |

| | | | |
|---|---|---|---|
| Electrical fast transient/burst IEC 61000-4-4 | ± 2 kV for power supply lines | ± 2 kV for power supply lines | Mains power quality should be that of a typical commercial or hospital environment. |
| Surge IEC 61000-4-5 | ± 1 kV lines to lines | ± 1 kV lines to lines | Mains power quality should be that of a typical commercial or hospital environment. |
| Voltage dips, short interruptions and voltage variations on power supply input lines IEC 61000-4-11 | <5% $U_T$ (>95% dip in $U_T$) For 0,5 cycle 40% $U_T$ (60% dip in $U_T$) For 5 cycle 70% $U_T$ (30% dip in $U_T$) For 25 cycle <5% $U_T$ (>95% dip in $U_T$) For 5 cycle | <5% $U_T$ (>95% dip in $U_T$) For 0,5 cycle 40% $U_T$ (60% dip in $U_T$) For 5 cycle 70% $U_T$ (30% dip in $U_T$) For 25 cycle <5% $U_T$ (>95% dip in $U_T$) For 5 cycle | Mains power quality should be that of a typical commercial or hospital environment. If the user of the Feeding Pump requires continued operation during power mains interruptions, it is recommended that the Feeding Pump be powered from an uninterruptible power supply or a battery. |
| Power frequency (50/60 Hz) magnetic field IEC 61000-4-8 | 3 A/m | 3 A/m | Power frequency magnetic fields should be at levels characteristic of a typical location in a typical commercial or hospital environment. |

**Guidance and manufacturer's declaration – electromagnetic immunity**

The Feeding Pump is intended for use in the electromagnetic environment specified below. The customer or the user of the Feeding Pump should assure that it is used in such an environment.

| **IMMUNITY test** | **IEC 60601 test level** | **Compliance level** | **Electromagnetic environment – guidance** |
|---|---|---|---|
| Conducted RF IEC 61000-4-6 | 3 Vrms 150 kHz to 80 MHz | 3 Vrms | Portable and mobile RF communications equipment should be used no closer to any part of the Feeding Pump, including cables, than the recommended separation distance calculated from the equation applicable to the frequency of the transmitter. Recommended separation distance $d = [\frac{3.5}{V_1}]\sqrt{P}$ $d = [\frac{3.5}{E_1}]\sqrt{P}$ 80MHz to 800MHz |
| Radiated RF IEC 61000-4-3 | 3 V/m 80 MHz to 2,5 GHz | 3 V/m | $d = [\frac{7}{E_1}]\sqrt{P}$ 800MHz to 2.5GHz where P is the maximum output power rating of the transmitter |

| | | | |
|---|---|---|---|
| | | | in watts (W) according to the transmitter manufacturer and d is the recommended separation distance in metres (m).<br>Field strengths from fixed RF transmitters, as determined by an electromagnetic site survey,[a] should be less than the compliance level in each frequency range.[b]<br>Interference may occur in the vicinity of equipment marked with the following symbol:<br> |

**Recommended separation distances between portable and mobile RF communications equipment and the Feeding Pump.**

The Feeding Pump is intended for use in an electromagnetic environment in which radiated RF disturbances are controlled. The customer or the user of the Feeding Pump can help prevent electromagnetic interference by maintaining a minimum distance between portable and mobile RF communications equipment (transmitters) and the Feeding Pump as recommended below, according to the maximum output power of the communications equipment.

| **Rated maximum output power of transmitter**<br>W | **Separation distance according to frequency of transmitter**<br>m | | |
|---|---|---|---|
| | **150 kHz to 80 MHz**<br>$d = [\frac{3.5}{V_1}]\sqrt{P}$ | **80 MHz to 800 MHz**<br>$d = [\frac{3.5}{E_1}]\sqrt{P}$ | **800 MHz to 2.5 GHz**<br>$d = [\frac{7}{E_1}]\sqrt{P}$ |
| 0.01 | 0.12 | 0.12 | 0.23 |
| 0.1 | 0.38 | 0.38 | 0.73 |
| 1 | 1.2 | 1.2 | 2.3 |
| 10 | 3.8 | 3.8 | 7.3 |
| 100 | 12 | 12 | 23 |

# 11. WARRANTY

The Feeding Pump has been carefully manufactured from the highest quality components. The pump is guaranteed against defects in material and workmanship for five (5) years from the date of purchase by the original purchaser.

Manufacturer's obligation, or that of its designated representative under this Warranty, shall be limited, at our option, to repairing or replacing the pump, which upon examination, is found to be defective in material or workmanship. The repair or replacement of any product under this Warranty shall not extend the above mentioned Warranty period.

Only qualified, trained service personnel should undertake all repairs under this Warranty. In the event that a pump is found to be defective during the warranty period, the purchaser shall notify manufacturer or its designated representative within thirty (30) days after such defect is discovered.

The defective pump should be sent immediately to manufacturer or its designated representative for inspection, repair or replacement. Material returned should be properly packaged to avoid pump damage.

This Warranty shall not apply to defects or damage caused, wholly or in part, by negligence, spilt fluids, dropping of the pump, misuse, abuse, improper installation or alteration by anyone other than qualified, trained personnel; or to damage resulting from inadequate packaging in returning the pump.

This Warranty is the sole and entire warranty pertaining to manufacturer's products and is in lieu of and excludes all other warranties of any nature whatsoever, whether stated, or implied or arising by operation of law, trade, usage or course of dealing, including but not limited to, warranties of merchantability and warranties of fitness for a particular purpose.

Purchaser expressly agrees that the remedies granted to it under this Warranty are purchaser's sole and exclusive remedies with respect to any claim of purchaser arising under this Warranty.

# APPENDIX A　Chart of flow rate vs time

## 1．1ml/h chart

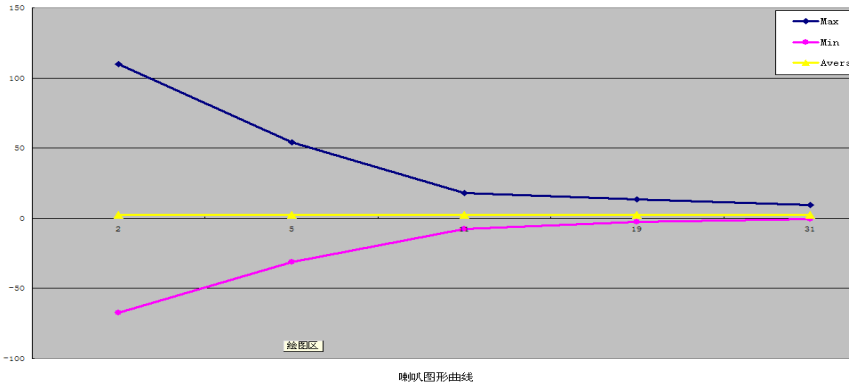


1ml/h bugle shape chart

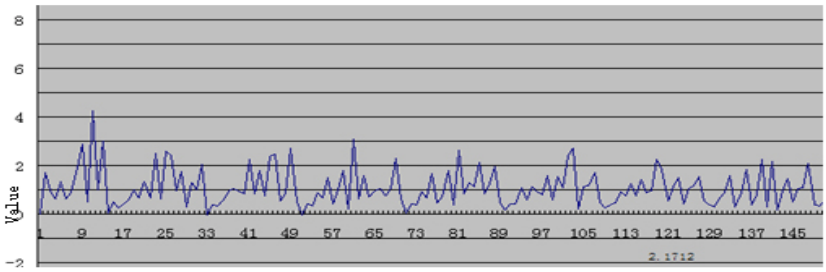


1ml/h flow rate chart

## 2．25ml/h chart

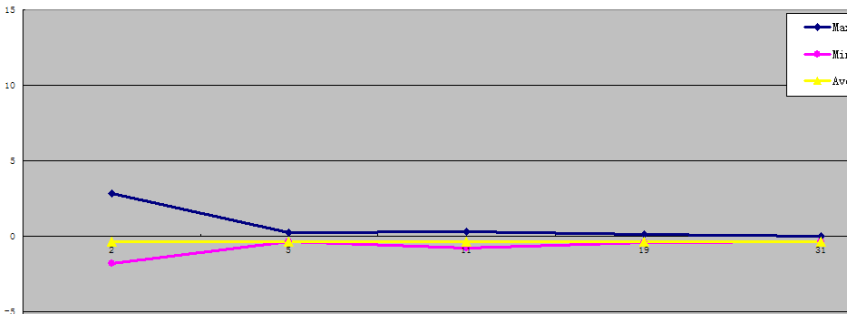


25ml/h bugle shape chart

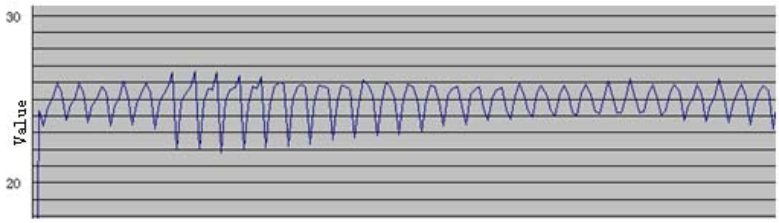


25ml/h flow rate chart

**NOTE**　• Charts for reference, data will vary when changing feeding set or test conditions.

# APPENDIX B Bolus, duration, pressure value

The duration of giving an alarm, pressure value and bolus value when feeding tube occluded.

| Flow rate | Pressure value | Duration (h/m/s) | Bolus (g) |
|---|---|---|---|
| 1ml/h | High:70 ~ 120 Kpa | ≤1/1/10 | ≤1.0194 |
| | Middle: 40 ~ 90 Kpa | ≤1/25/18 | ≤1.4217 |
| | Low: 20 ~ 60Kpa | ≤1/54/32 | ≤1.9089 |
| 100ml/h | High: 70 ~ 120 Kpa | ≤0/2/07 | ≤0.8819 |
| | Middle: 40 ~ 90 Kpa | ≤0/3/13 | ≤1.3403 |
| | Low: 20 ~ 60Kpa | ≤0/4/15 | ≤1.7708 |
| 2000ml/h | High: 70 ~ 120 Kpa | ≤0/0/3 | ≤0.9167 |
| | Middle: 40 ~ 90 Kpa | ≤0/0/4 | ≤1.2222 |
| | Low: 20 ~ 60Kpa | ≤0/0/5 | ≤1.5278 |

**NOTE** • Charts for reference, data will vary when changing feeding set or test conditions.

**Beijing KellyMed Co., Ltd.**
Room 115, 4 # Building, No. 2 Tiyuan West Road,
Haidian District, Beijing, 100084, China
Tel: +86-10-82490385
Fax: +86-10-65587908

EC REP

**Labcon GmbH**
Benzstrasze 4, 64646 Heppenheim, Germany
DIMDI Code: DE0000046575